Dantherm®
Air Handling

# DFC 350 and 450

Service manual

EN

No. 840121 • rev. 1.3 • 09.01.2012

Focus. Trust. Initiative.

# DFC 350 and 450

Service manual

EN

No. 840121 • rev. 1.3 • 09.01.2012

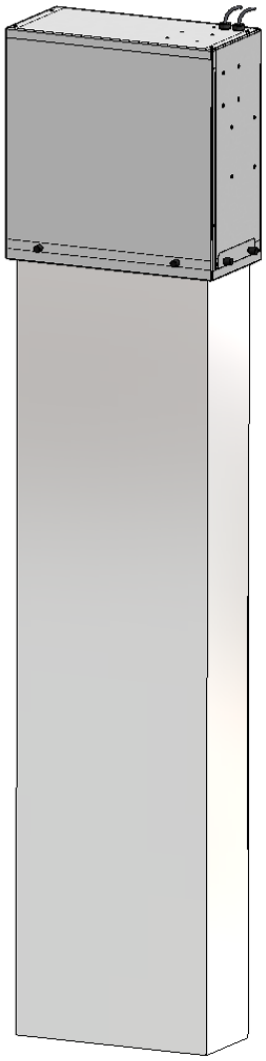

# Overview

**Introduction**

This is the service manual for the Displacement Free Cooling unit DFC 350 & 450.

The DCF 350-450 unit is usually shipped including a control unit. This control unit, TKS 3000A EC, ACUE 3000 or FAC 48, is covered in a separate manual.

**Table of content**

The Service Manual covers the following main topics:

# General information

**Introduction**

This section provides general information about the unit and this Service Manual.

**Target group**

The target group for this Service Manual is the technicians who install, maintain and repair the unit.

**Warning**

**It is the responsibility of the operator to read and understand this service manual and other information provided and to use the correct operating procedures.**

**The product should only be operated by qualified (trained) personnel. Failure to do so can result in personal injury or equipment damage.**

Read the entire manual before the initial start-up of the product. It is important to know the correct operating procedures for the product and all safety precautions to prevent the possibility of property damage and/or personal injury.

**Products**

The Service Manual cover the following products:

| Name | Type No. |
|---|---|
| DFC 350 | 299763 |
| DFC 450 | 299745 |

**Copyright**



**Reservations**

The service manual is subject to changes without notice.

**CE-Declaration of Conformity**

Dantherm Air Handling A/S, Marienlystvej 65, DK7800 Skive hereby declare that the unit are in conformity with the following directives:

| | |
|---|---|
| 2006/95/EG | Low Voltage Directive including 93/68/EEC where required |
| 86/336 EEC | EMC Directive including 92/31/EEC and 93/68/EEC |
| 98/37 EG | Machine Directive |

The product is manufactured with components which follow the application standards for Low Voltage Directive and in case of norms for EMC in EU countries.

**Recycling**

The unit is designed to last for many years. When the time comes for the unit to be recycled, the unit should be recycled according to national rules and procedures to protect the environment.

# General principle for DFC units

**General**

A DFC (Displacement Free Cooling) unit supplies the cold outdoor air through a diffusor filter with very low velocity. This will make a dune of cold air at the floor and up to a height of 1,6 meter in the shelter. The temperature at the ceiling will be relatively high.

The idea is to remove more heat with lower air volume in order to save power consumption of the fan.

This is only possible if a large temperature difference between supply air and air out of the shelter can be achieved.

**Efficiency**

The efficiency of the DFC unit depends very much on the circulation of the internal air circulation in the telecom equipment and in the shelter. It is therefore very necessary to do a thorough test of the airflows in the shelter before initiating a bigger roll out.

**Illustration**

The illustration below shows the DFC and some external parts unit mounted in a container:

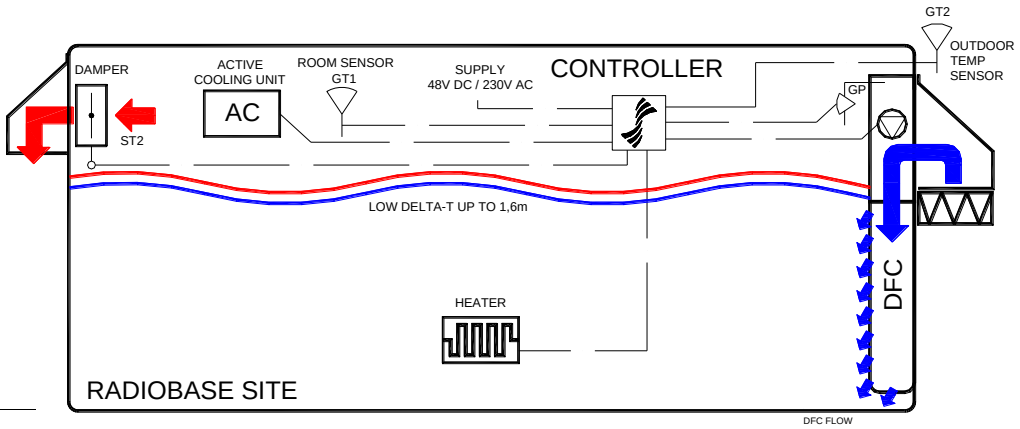


**Parts**

This table describes the different part (from left to right) in the illustration above:

| Part | Description |
|---|---|
| Outdoor Temp sensor | Measures the outdoor temperature (NTC resistor) |
| DFC unit | The unit including bag filter and air inlet hood with compact filter |
| GP | Supply to the unit from power source |
| Controller | Climate unit controller TKS3000EC, ACUE3000 or others |
| Heater | External electrical heater |
| Supply 48V DC/230 V AC | Supply to the controller and the DFC |
| Room sensor GT1 | Measures the indoor temperature (NTC resistor) |
| Active cooling unit | Existing airconditioner (often split unit) |
| Damper | Electrical damper allowing warm air to leave the shelter |

*Continued overleaf*

# Parts and function

**Introduction**

The DFC units have a simple but very robust design. The parts are shown below.

**Illustration**

This drawing shows the parts of the DFC unit. It includes a fan  and a filter guard

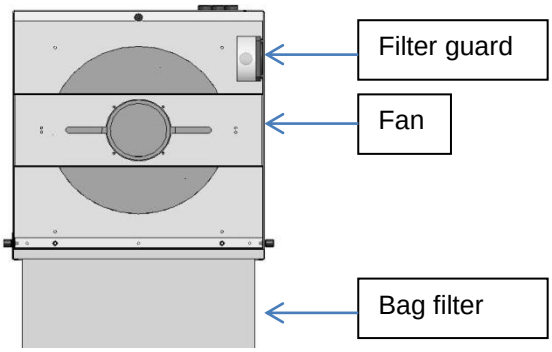


**Parts**

This table describes the parts in the illustration:

| Part | Description |
|---|---|
| Filter guard | Measures the pressure on both sides of the filter. When the pressure drop exceeds 150 Pascal (factory setting) the build in switch which is connected to the controller will open and cause an alarm. |
| Fan | The fan is a centrifugal fan either 48 V DC or 230 V AC. See technical data for further information. |
| Bag filter | The Bag filter is either filter class F5 or F6, see technical data for further information. |

# How to Mount the DFC 350 or DFC 450

**Procedure**

Follow these steps to mount the DFC 350 or DFC 450:

| Step | Action |
|---|---|
| 1 | Make a Ø245mm hole in the shelter wall about 1900 mm above the floor. |
| 2 | Demount the front cover of the unit by removing the 3 fluted grip knobs. |
| 3 | Hold the unit in position and fasten it to the wall with minimum 4 screws. |
| 4 | Slide the filter into place and remount the front cover. |

**DFC 350**


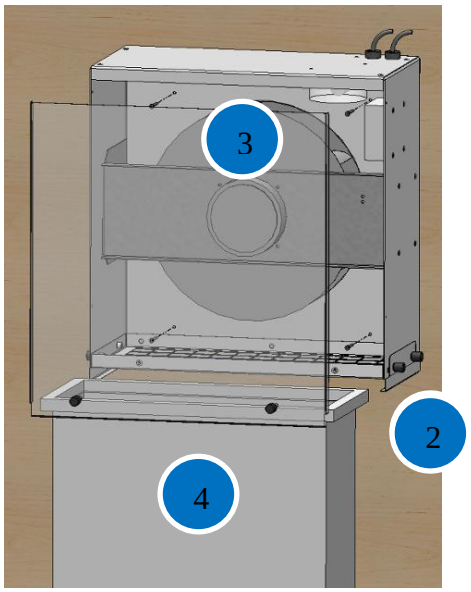


**DFC 450**

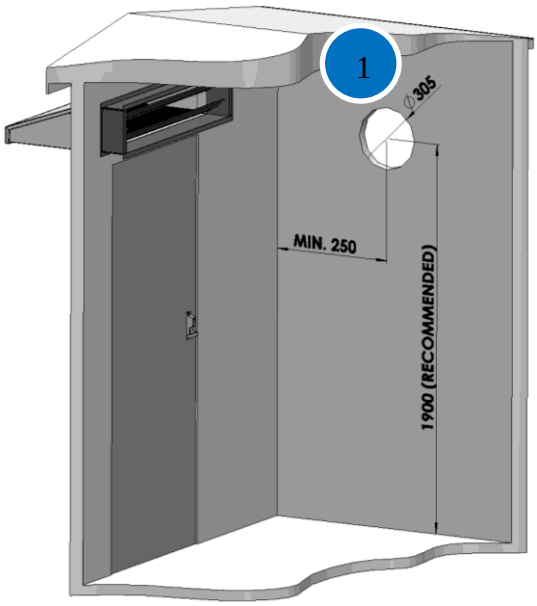


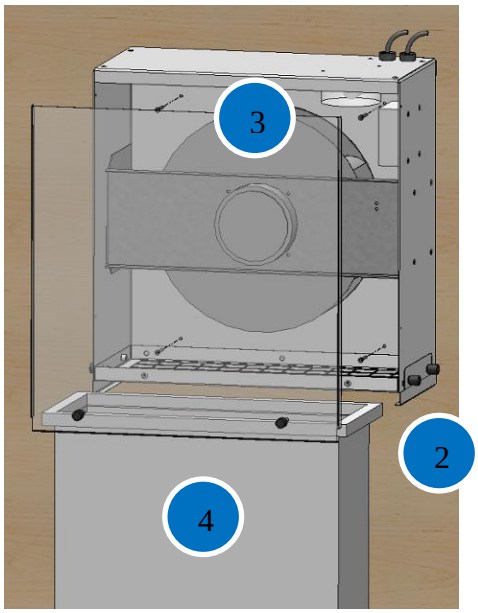


*f*

# How to Mount the DFC 350 or DFC 450, *continued*

**Air inlet hood**

Put sealing rubber on the flanges of the hood, hold it in position above the inlet hole and fasten it to the wall.

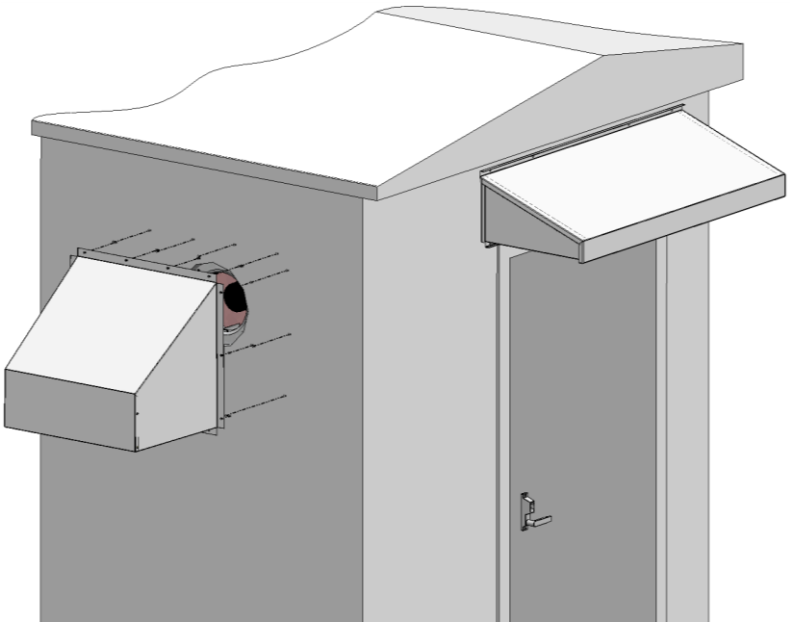

**Exhaust damper**

Cut out an exhaust opening W: 1000xH: 210mm above the door (when possible).
Hold the motorized damper in position and fasten it to the wall.

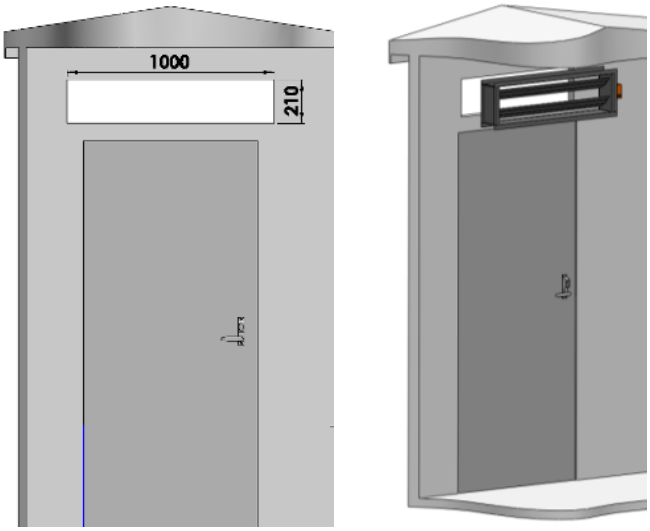


*Continued overleaf*

# How to Mount the DFC 350 or DFC 450, *continued*

**Exhaust hood**

Put sealing rubber on the flanges of the exhaust hood.
Hold it in position and fasten it to the wall.

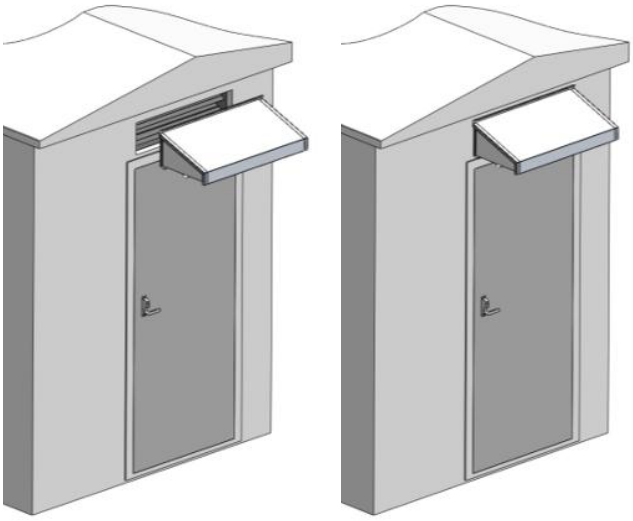

**Ground**

Connect the DFC 450 to ground by using the nut market with ground symbol.
For more wiring information, please see section *Wiring Diagram*.

**Electrical connection**

For electrical connection of the unit see the Service Manual for the specific controller that you are using, or see “Wiring Diagram” at the end of this manual.

# Technical data DFC 350

**Introduction**

This Free Cooling unit is very compact, quiet and economic due to the Displacement Free Cooling system. In this product the EC-fan signal is reduced to 5V to get the optimized performance.

**Air flow and sound**

This table shows the technical data for airflow and sound pressure:

| Parameter | 48V DC | 230V AC |
|---|---|---|
| Max air flow | 514 $m^3/h$ | 514 $m^3/h$ |
| Max air flow | 143 l/s | 143 l/s |
| Free cooling capacity at Δt=5°C | 3 kW | 3 kW |
| Max power consumption | 40 W | 35 W |
| Sound pressure at 5m from shelter | 36 dB(A) | 34 dB(A) |
| Sound pressure at 10m from shelter | 31 dB(A) | 31 dB(A) |

**Cabinet**

This table shows the specifications for the cabinet:

| Specification | Designation | DFC 350 |
|---|---|---|
| Weight | Controller included | 10 kg |
| Metal sheet material | Aluzinc AZ150 | 0,8-1,5 mm |

**Fan motor**

This table shows the data for the fan motor:

| Voltage version | 48V DC | 230V AC |
|---|---|---|
| Voltage nominal | 48V DC | 230V AC |
| Current | 2,3 A | 0,9 A |
| Max power consumption at standard settings | 40 Watt | 35 Watt |
| Speed | 1500 rpm | 1500 rpm |

**Filter**

This table shows the data for the filter:

| Specification | Filter data |
|---|---|
| Type | Bag filter |
| Filter Class | F6 |
| Total Area | 1,4 $m^2$ |
| Recommended filter monitor settings | 150 Pa |

# Technical data DFC 350

**Air flow and sound** This table shows the technical data for airflow and sound pressure:

| Voltage version | 48V DC | 230V AC |
|---|---|---|
| Max air flow | 1100 $m^3$/h | 1100 $m^3$/h |
| Max air flow | 306 l/s | 306 l/s |
| Free cooling capacity at Δt=5°C | 5 kW | 5 kW |
| Max power consumption | 40 W | 61 W |
| Sound pressure at 5m from shelter | 36 dB(A) | 34 dB(A) |
| Sound pressure at 10m from shelter | 31 dB(A) | 31 dB(A) |

**Cabinet** Data and dimensions of the cabinet are shown in the following table:

| Specification | Designation | DFC 450 |
|---|---|---|
| Weight | Controller excluded | 13 kg |
| Metal sheet material | Aluzinc AZ150 | 0,8-1,5 mm |

**Fan motor** Data of the fan motor is shown in the following table:

| Voltage version | 48V DC | 230V AC |
|---|---|---|
| Voltage nominal | 48V DC | 230V AC |
| Current | 2,3 A | 1,1 A |
| Max power consumption | 40 W | 54 W |
| Speed | 1200 rpm | 1200 rpm |

**Filter** In the table below the data of the filter are specified:

| Specification | Filter data | Filter data |
|---|---|---|
| Type | Bag filter | |
| Filter Class | F5 | F6 |
| Total Area | 2 $m^2$ | |
| Recommende filter monitor setting | 100 Pa | 150 Pa |

**Electrical heater,** This table shows the voltage and power consumption of the electrical heater (optional):

| Specification | Value |
|---|---|
| Power, Voltage | 1300 W, 230 V AC |

# Technical data DFC 350 and 450

**Controls**

The table below show the specification for the 2 controllers for the DFC unit:

| Specification | 48V DC | | 230V DC |
|---|---|---|---|
| | **Enclosure IP65** | **DIN rail mounting** | **Enclosure IP65** |
| Standard control units (See separate manuals) | **ACUE 3000** | | **TKS 3000 EC** |
| Special control units (See separate manuals) | | FAC 48 | |
| Indoor temperature sensor | RG-TD5 | RG-TD5 | RG-TD5 |
| Outdoor temperature sensor | UG-TD5 (optional) | UG-TD5 (optional) | UG-TD5 (optional) |
| Filter monitor | JDW5 (optional) | JDW5 (optional) | JDW5 (optional) |

# Capacity and data diagrams

**Performance**

The diagram below shows data for DFC 350:

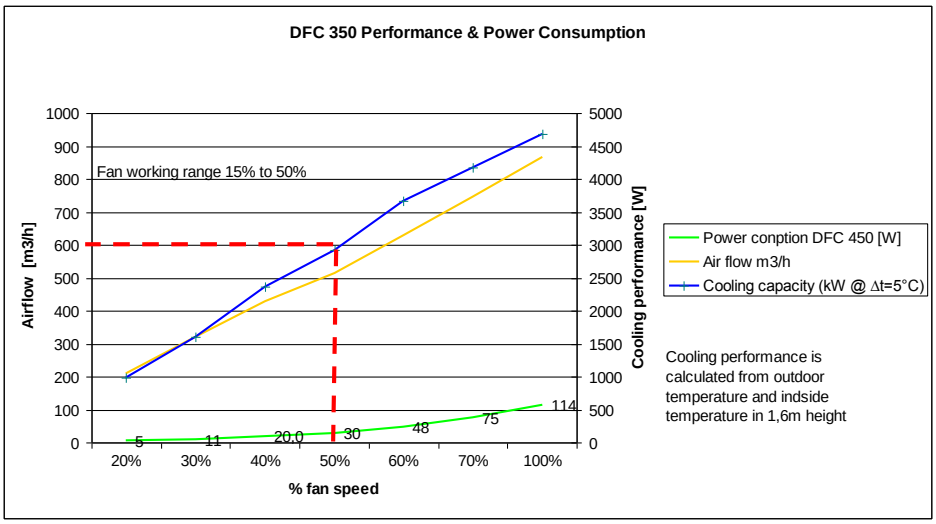


**Airflow & Pressure drop**

The diagram below shows data for DFC 350:

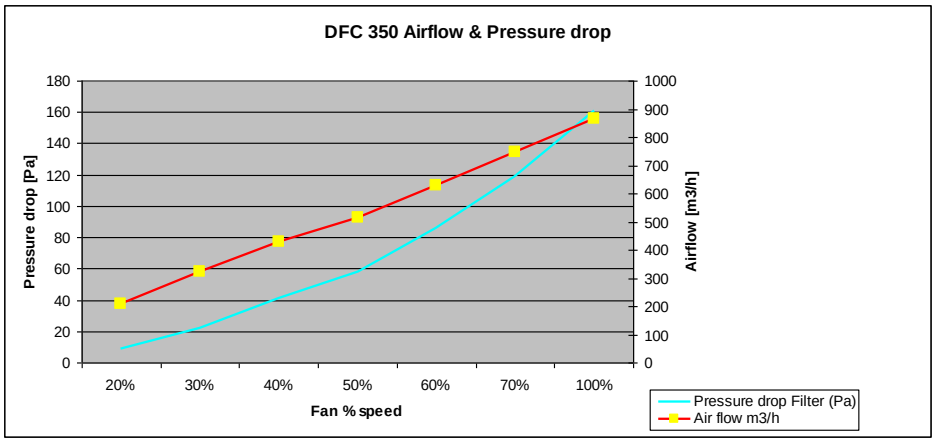


**Performance**

The diagram below shows data for DFC 450:

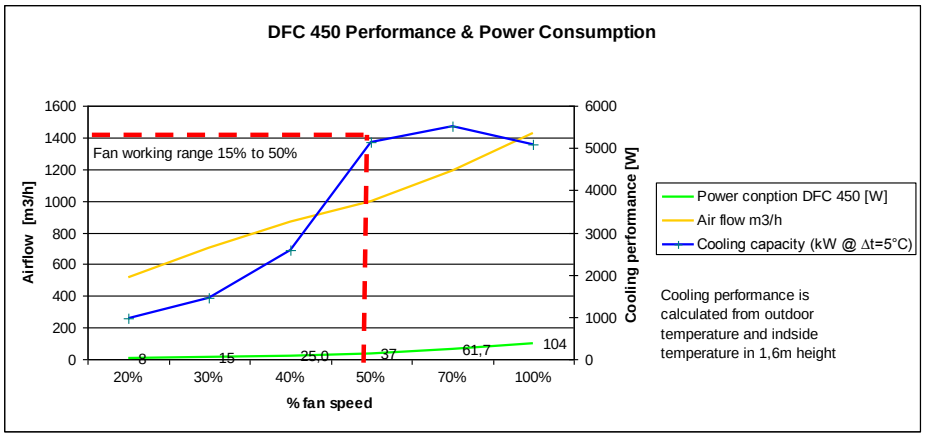


*Continued overleaf*

# Capacity and data diagrams, *continued*

**Airflow & Pressure drop** The diagram below shows data for DFC 450:

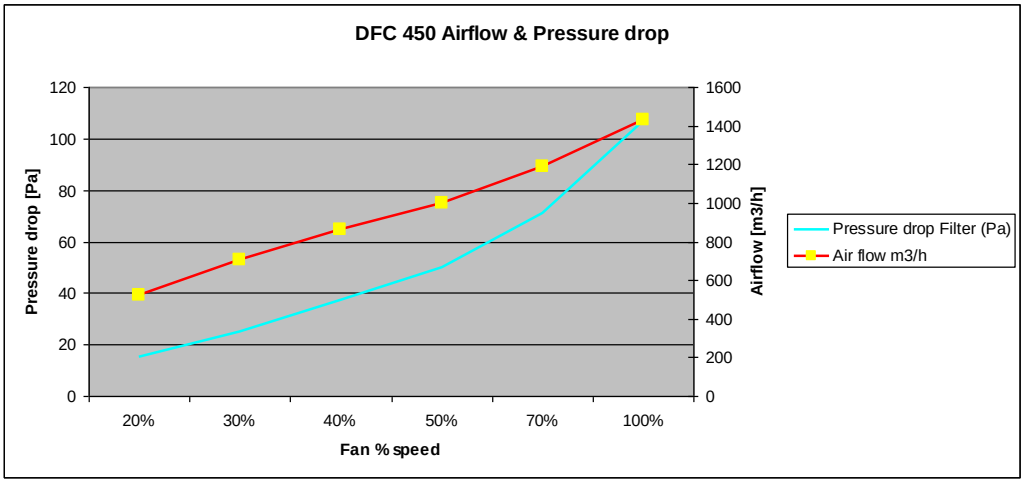

# Dimensions

**Illustration DFC 350** The drawings below illustrate the dimensions of the DFC 350.

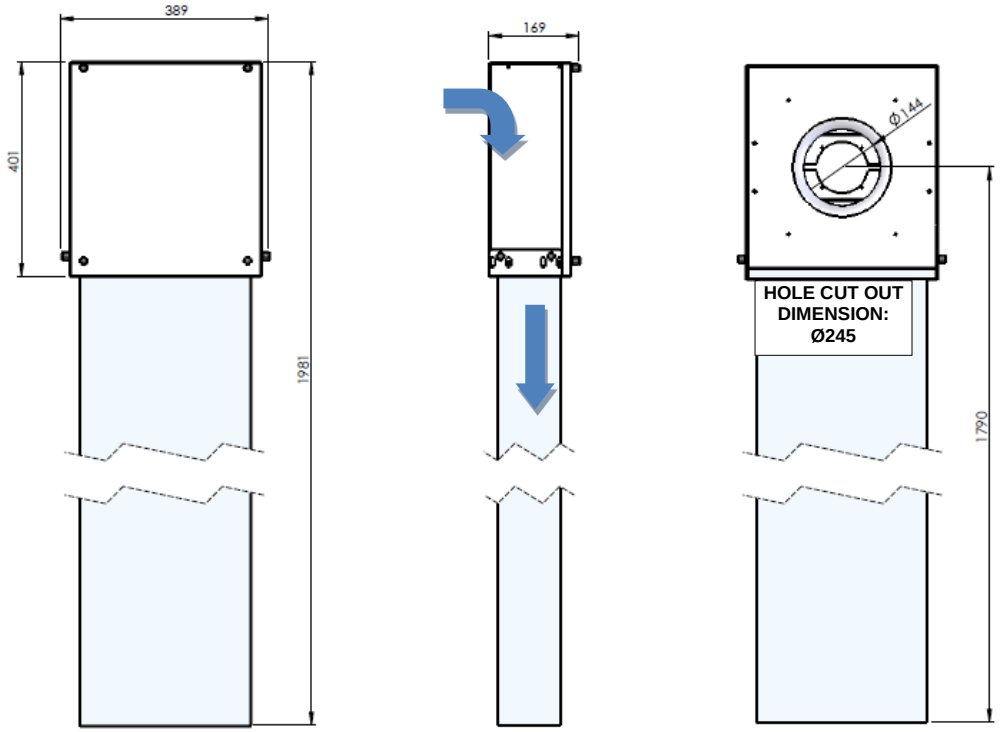


*Continued overleaf*

## Dimensions, *continued*

**Illustration DFC 450** The drawings below illustrate the dimensions of the DFC 450.

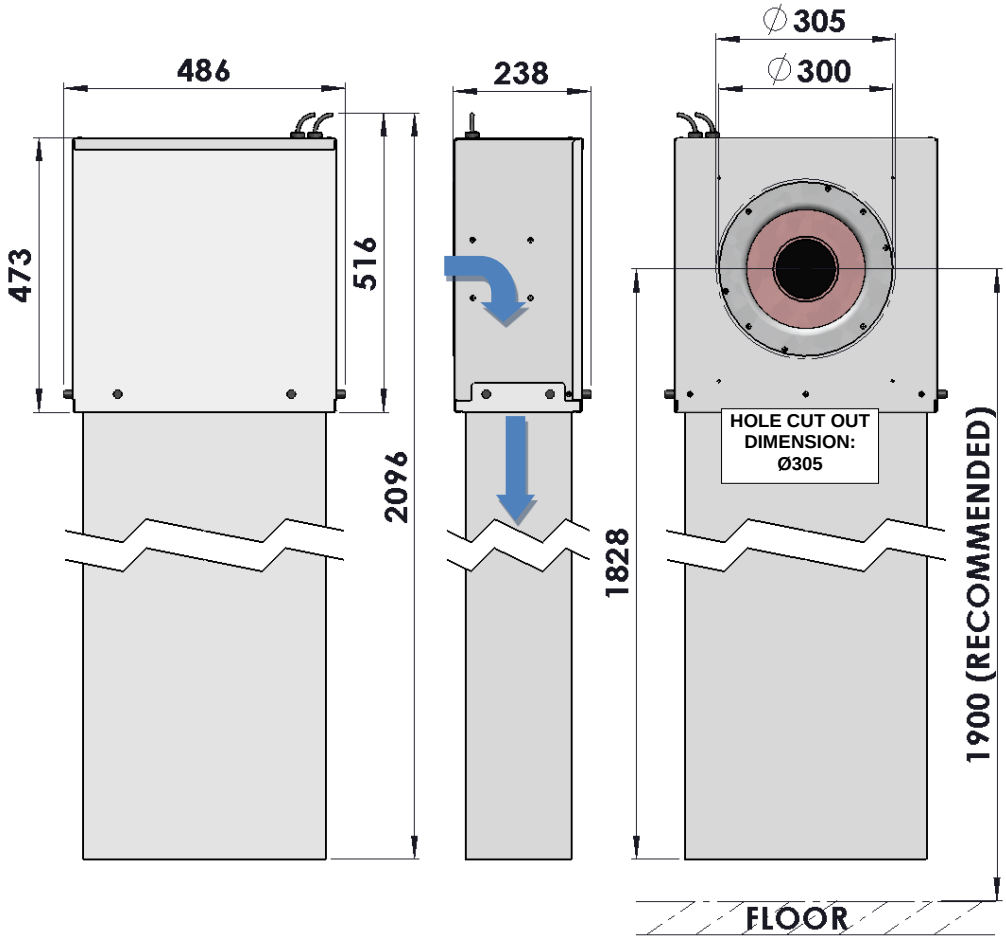


*Continued overleaf*

# Dimensions, *continued*

**External accessories**

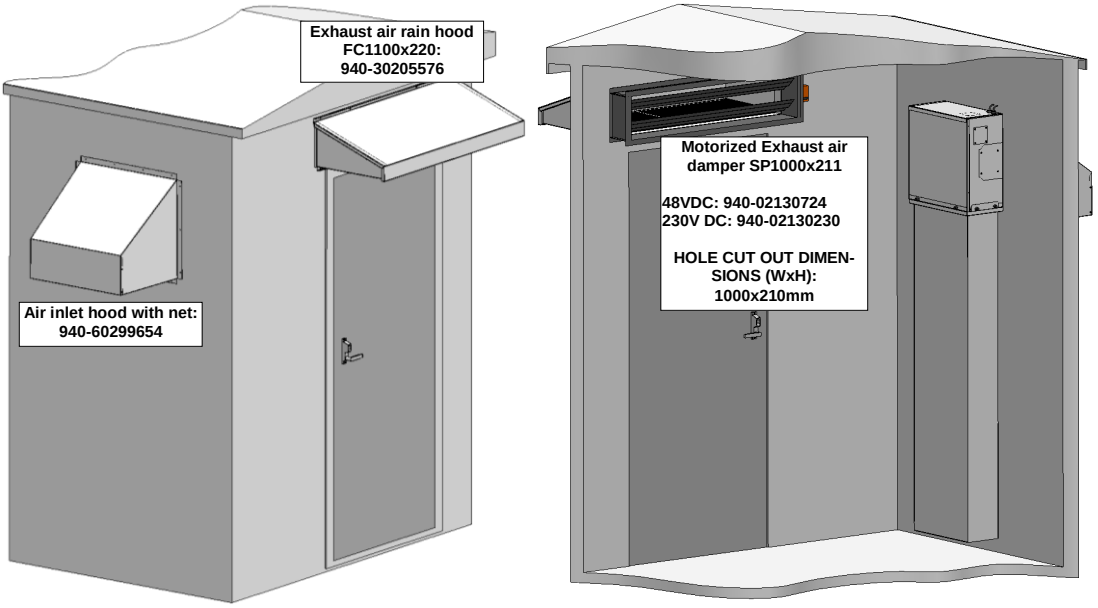

# Installation alternatives

**Introduction**

The pictures below shows the three ways the Displacement Free Cooling unit can be mounted and still make filter exchange easy. There are three different lids, of which only one should be opened to take out and replace the bag filter.

**Front service**

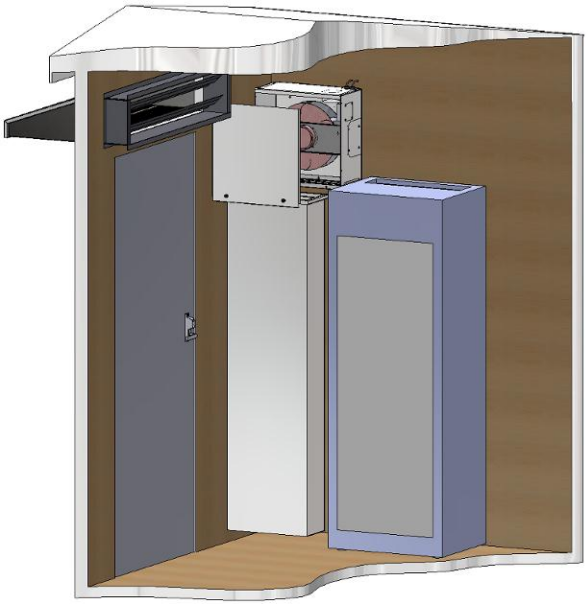

**Left and right service**

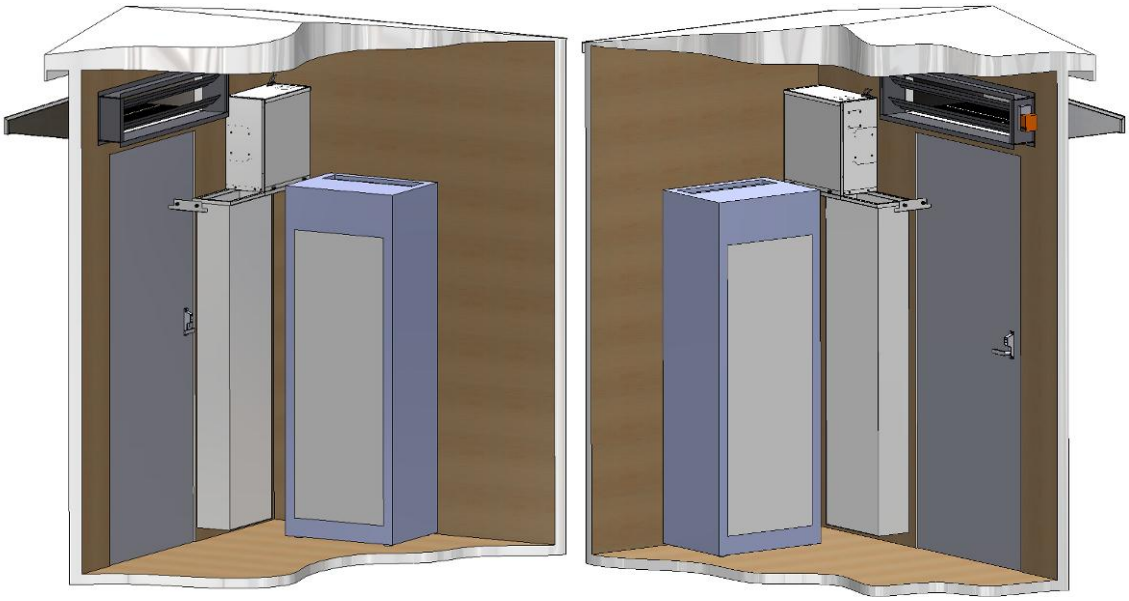

# Wiring diagram – ACUE 3000

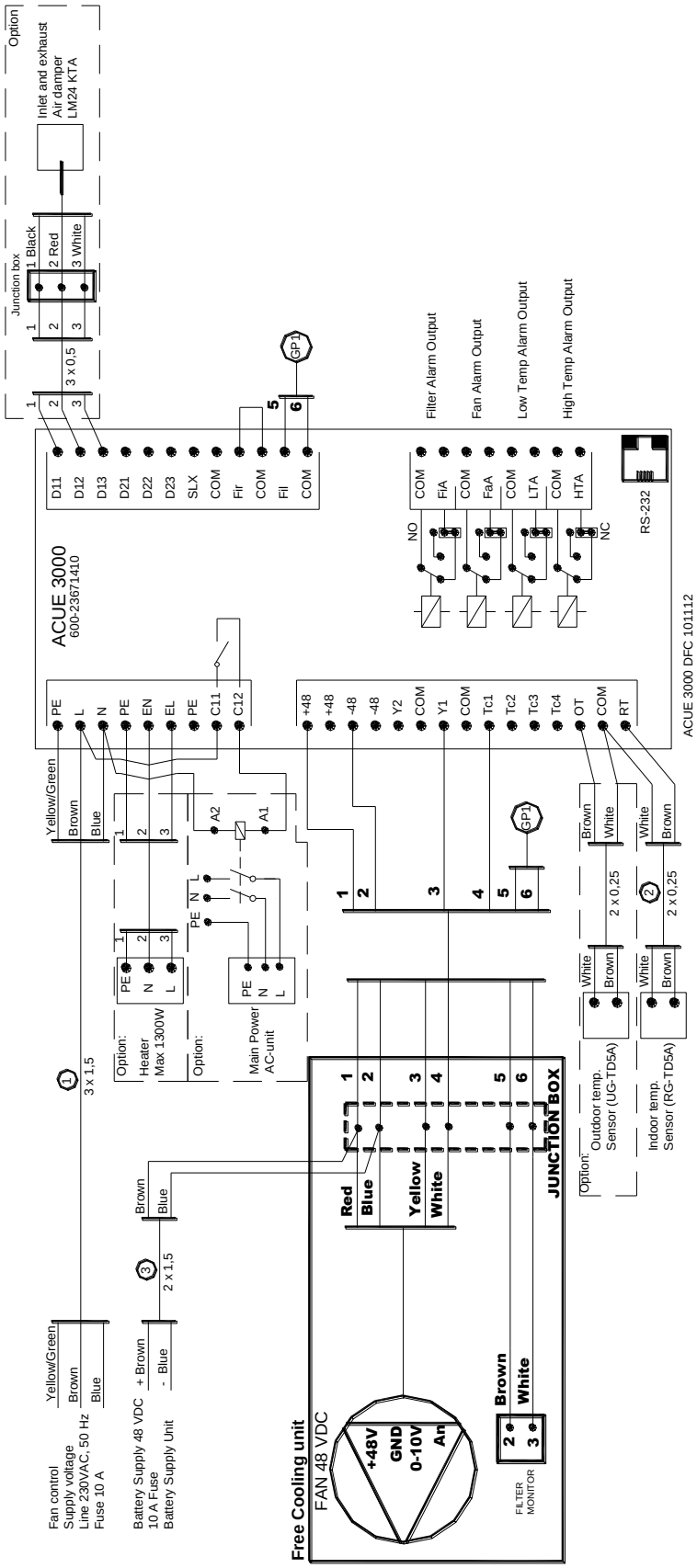

# Wiring diagram – TKS 3000A EC

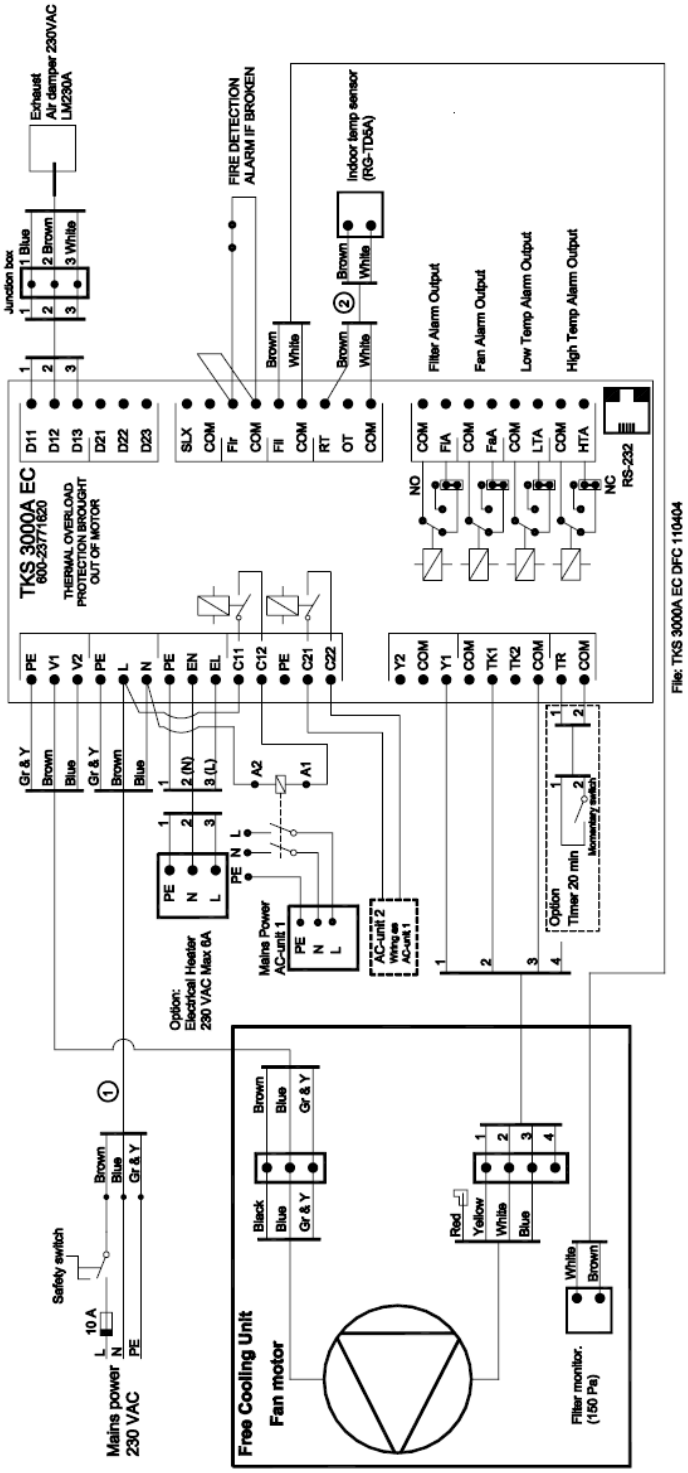

# Wiring diagram – FAC 48

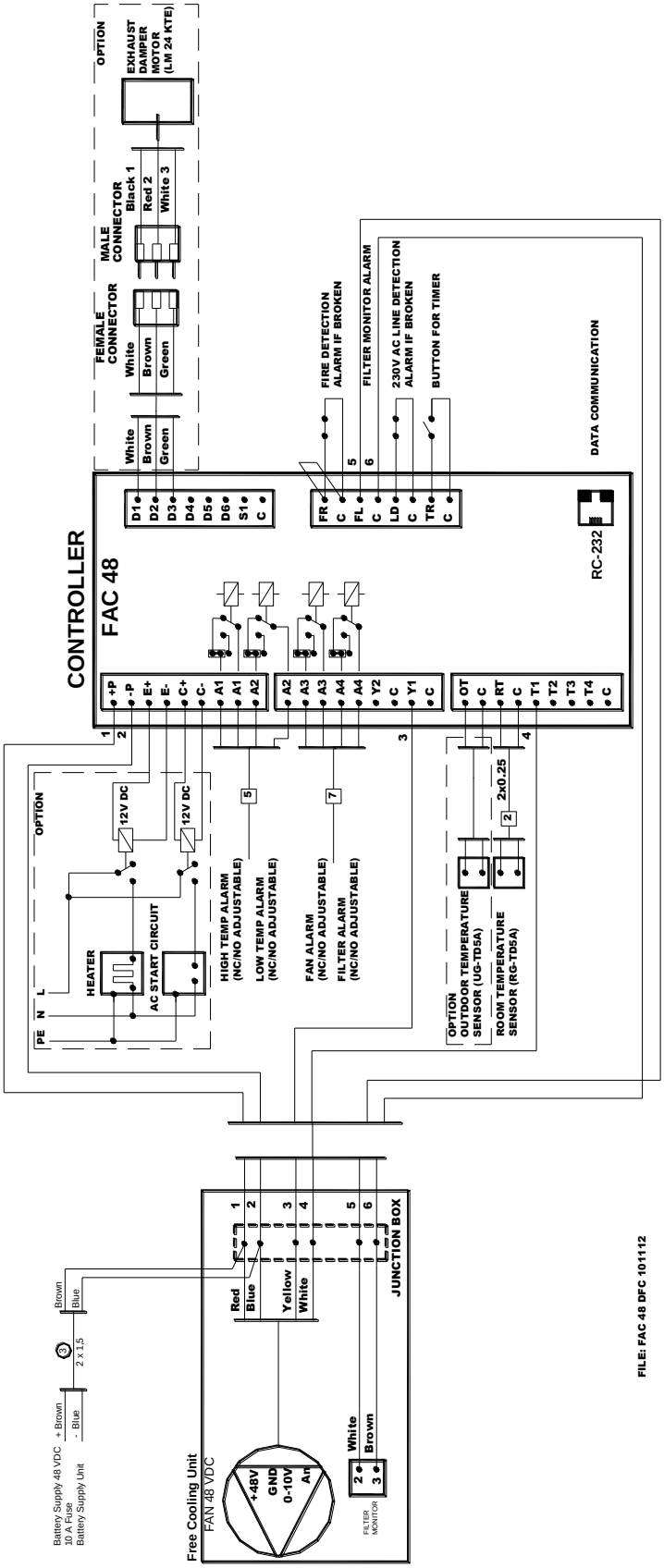

# Preventive maintenance

**Introduction**

The unit needs preventive maintenance with specific intervals to avoid breakdown or inefficient operation. It is important to notice that interval between maintenance can vary depending on the specific environment.

**Caution!**

Switch off both the DC and AC supply before working on the unit!

Make sure that all work has been performed before switching on the power again.

**Service function "Timer"**

The control unit has a service function to ensure better indoor climate for 20 minutes during the presence of service technicians. To activate the service function, push one step up from the main menu to find "Timer". Now press "Enter". The control unit will now count down from 20 minutes and after that go back to normal operation.

**Interval**

Dantherm Air Handling AB recommends that intervals between preventive maintenance do not exceed 1 year. It is also our recommendation that the site and unit is examined closely during the first preventive maintenance to determine whether the interval is too long. We recommend that preventive maintenance visits are carried out during spring.

**Condition for warranty**

The factory warranty is only valid if documented preventive maintenance has been carried out with an interval of maximum 1 year. The documentation should be in form of a written log.

**Leaving the site**

Before leaving the site, make sure there are no alarms!

**Recommended approach**

Follow these steps to carry out preventive maintenance on the unit:

| Step | Action |
|---|---|
| 1 | Make sure that the power to the unit is safely switched off. |
| 2 | Remove the worn-out filter and clean the unit carefully. |
| 3 | Clean the dampers with regards to function and tightness. |
| 4 | Clean the fan and check that the mounting is OK. |
| 5 | Check and clean the air intake and exhaust accessories. |
| 6 | Insert the new filter carefully into the unit. |
| 7 | Close the unit and make sure that the service is completed correctly. |
| 8 | Turn on the power to the unit. |
| 9 | Run the Self test according to the separate manual for the controller. |

# Spare parts list

**Spare parts DCF 350 only**

This table shows the spare parts for **DFC 350**:

| Spare part | Type | Part number |
|---|---|---|
| Bag filter | Filter class F5 | 299821 |
| Bag filter | Filter class F6 | 067335 |
| Fan – 48V DC | EC, Centrifugal fan, 48V DC | 067738 |
| Fan – 230V AC | EC, Centrifugal fan, 230V AC | 840060 |

**Spare parts DCF 450 only**

This table shows the spare parts for **DFC 450**:

| Spare part | Type | Part number |
|---|---|---|
| Bag filter | Filter class F5 | 299749 |
| Bag filter | Filter class F6 | 840058 |
| Fan – 48V DC | EC, Centrifugal fan, 48V DC | 067739 |
| Fan – 230V AC | EC, Centrifugal fan, 230V AC | 840061 |

**Control parts**

This table shows the various control parts, sensors and filter monitor for both the DFC 350 and DFC 450. Check the label on the controller for identification:

| Spare part | Type | Part number |
|---|---|---|
| Control Unit 48V | ACUE 3000 – 48V DC | 840012 |
| Control Unit 230V | TKS 3000A EC – 230V AC | 840014 |
| Alt. control Unit 48 | FAC 48 – 48V DC | 840015 |
| Indoor temp. sensor | RG-TD5A | 840017 |
| Alt. Indoor temp. sensor | SG-TD5A, 5m cable | 840018 |
| Outdoor temp. sensor | UG-TD5A | 840019 |
| Filter monitor | | 840020 |

**Other parts**

This table shows the available damper actuators and heater:

| Spare part | Type | Part number |
|---|---|---|
| Damper actuator for 48V controller | LM24A KTE | 840021 |
| Damper actuator for 230V controller | LM230A | 840022 |
| External heater | 1300/550W, 230V | 840023 |

# Comfortable surroundings in any climate

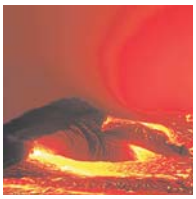

Since 1958 Dantherm Air Handling has developed and produced climate control and air handling solutions that ensure optimum conditions for people and sensitive equipment alike. No climate is too extreme for us to handle – from the bitter cold at the North and South Poles to the searing heat of the Sahara.

Our core business areas are dehumidification, heating, air conditioning, ventilation and electronics cooling. Innovative, durable and cost-efficient products have secured us a position as a leading global manufacturer of stationary and mobile climate control units. And we are forever pursuing new techniques that will improve our solutions and ultimately your projects.

Our Head Office is located in Denmark, and we have companies in Denmark, Norway, Sweden, the United Kingdom, the United States and China, with an extensive European dealer network.

Dantherm Air Handling is part of the Dantherm A/S group.


**HEAD OFFICE**

Dantherm Air Handling Holding A/S
Marienlystvej 65
DK-7800 Skive
Denmark
Tel.: +45 9614 3700
Fax: +45 9614 3800
E-mail: dantherm.dk@dantherm.com
www.dantherm-air-handling.com

**COMPANIES**

**DENMARK**
Dantherm Air Handling A/S
Marienlystvej 65
DK-7800 Skive
Denmark
Tel.: +45 9614 3700
Fax: +45 9614 3800
E-mail: dantherm.dk@dantherm.com
www.dantherm-air-handling.dk

**NORWAY**
Dantherm Air Handling AS
Løkkeåsveien 26
N-3138 Skallestad
Norway
Tel: +47 33 35 16 00
Fax: +47 33 38 51 91
E-mail: dantherm.no@dantherm.com
www.dantherm-air-handling.no

**CHINA**
Dantherm Air Handling (Suzhou) Co., Ltd.
Bldg. # 9, No. 855 Zhu Jiang Rd.
Suzhou New District, Jiangsu
215219 Suzhou
China
Tel.: +86 512 6667 8500
Fax.: +86 512 6667 8501
E-mail: dantherm.cn@dantherm.com
www.dantherm-air-handling.com.cn

**UNITED KINGDOM**
Dantherm Air Handling Ltd.
12 Windmill Business Park
Windmill Road
Clevedon
North Somerset BS21 6SR
United Kingdom
Tel.: +44 (0) 1275 876851
Fax: +44 (0) 1275 343086
E-mail: dantherm.co.uk@dantherm.com
www.dantherm-air-handling.com

**USA**
Dantherm Air Handling Inc.
110 Corporate Drive, Suite K
Spartanburg, SC 29303
USA
Tel.: +1 864 595 9800
Fax: +1 864 595 9810
E-mail: dantherm.usa@dantherm.com
www.dantherm-air-handling.us

**SWEDEN**
Dantherm Air Handling AB
Virkesgatan 5
SE-614 31 Söderköping
Sweden
Tel.: +46 (0) 121-130 40
Fax: +46 (0) 121-133 70
E-mail: infose@dantherm.com
www.dantherm-air-handling.se



THORVIG TRYK, Skive
10.2010